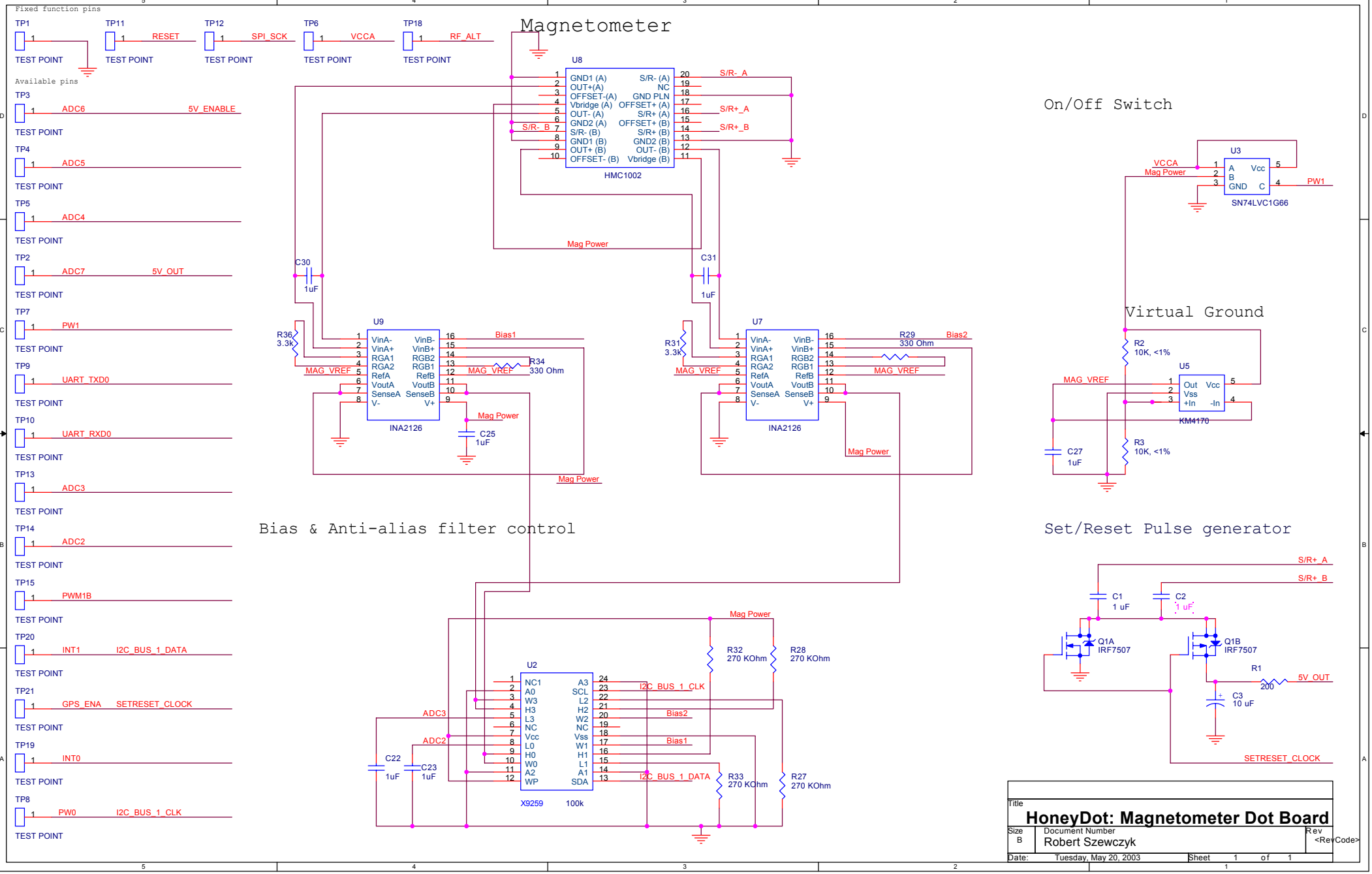
Fixed function pins
TP1 TEST POINT
TP11 RESET TEST POINT
TP12 SPI_SCK TEST POINT
TP6 VCCA TEST POINT
TP18 RF_ALT TEST POINT
Available pins
TP3 ADC6 5V_ENABLE TEST POINT
TP4 ADC5 TEST POINT
TP5 ADC4 TEST POINT
TP2 ADC7 5V_OUT TEST POINT
TP7 PW1 TEST POINT
TP9 UART_TXD0 TEST POINT
TP10 UART_RXD0 TEST POINT
TP13 ADC3 TEST POINT
TP14 ADC2 TEST POINT
TP15 PWM1B TEST POINT
TP20 INT1 I2C_BUS_1_DATA TEST POINT
TP21 GPS_ENA SETRESET_CLOCK TEST POINT
TP19 INT0 TEST POINT
TP8 PW0 I2C_BUS_1_CLK TEST POINT
Magnetometer
U8
HMC1002
S/R- A
S/R+_A
S/R+_B
S/R- B
Mag Power
C30 1uF
C31 1uF
On/Off Switch
U3
SN74LVC1G66
VCCA
Mag Power
PW1
Virtual Ground
R2 10K, <1%
U5
KM4170
MAG_VREF
R3 10K, <1%
C27 1uF
U9
INA2126
R36 3.3k
Bias1
R34 330 Ohm
C25 1uF
U7
INA2126
R31 3.3k
R29 330 Ohm
Bias2
Bias & Anti-alias filter control
Set/Reset Pulse generator
C1 1 uF
C2 1 uF
Q1A IRF7507
Q1B IRF7507
R1 200
5V_OUT
C3 10 uF
SETRESET_CLOCK
U2
X9259 100k
R32 270 KOhm
R28 270 KOhm
R33 270 KOhm
R27 270 KOhm
I2C_BUS_1_CLK
I2C_BUS_1_DATA
ADC3
ADC2
C22 1uF
C23 1uF
Title
HoneyDot: Magnetometer Dot Board
Size B
Document Number
Robert Szewczyk
Rev <RevCode>
Date: Tuesday, May 20, 2003
Sheet 1 of 1